PERFORMANCE
iN LIGHTING

ART.: 8434184256380

EB434 LED WIDE FLOOD REFLECTOR



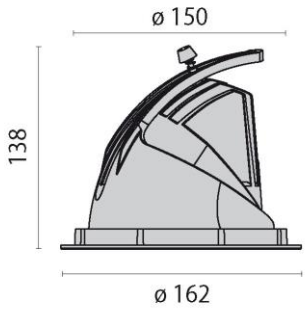

Art.: 8434184256380, EB434 LED, 27W, 3000K, Driver dali, Direct / wideflood (2 x 30°-37°), Black, Recessed LED luminaire for indoors, consisting of: Die-cast aluminum spotlight body and ring, powder-coated, Reflector can be swivelled horizontally inwards and outwards thanks to the unique swivel mechanism, Adjustable about 60° (from -15° up to 45°, rotatable about 355°, High-brilliance spherical faceted reflector for maximum lamp performance and neutral colour rendering, Reflector in Wide Flood design Colour rendering index Ra > 90, Colour tolerance according to MacAdam ≤ 3 SDCM Toolless mounting, Complete with electric converter, Anchor springs, Complete with clear safety glass pane

Connected load	27 W
Luminous flux	2720 lm
Efficiency	101 lm/W
Colour temperature	3000K
Colour rendering (CRI)	80
IP class	20
Nominal voltage	220 – 240 V
Colour	RAL 9005

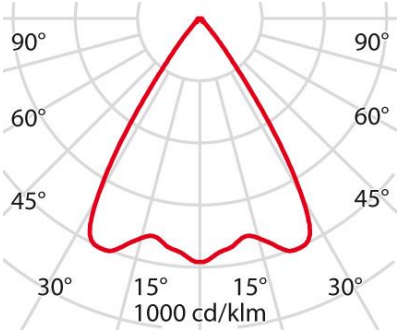

Performance in Lighting GmbH | Stapelner Str. 1 + 3 | 38644 Goslar | Germany | Tel. +49 (0) 5321 / 37 77-0 | Fax +49 (0) 53 21 / 37 77-99
info.de@pil.lighting | www.light-performer.com | www.performanceinlighting.com